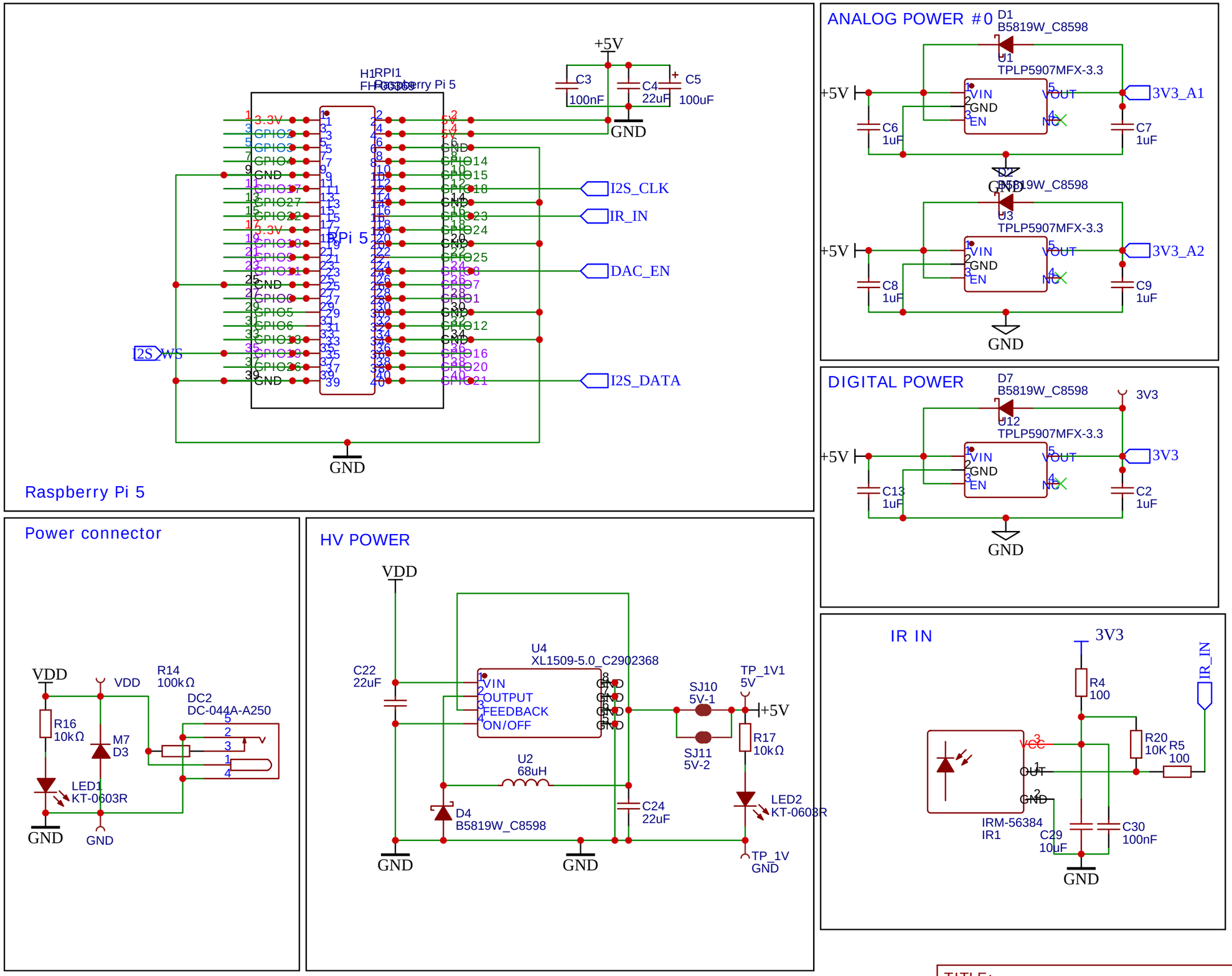


| | |
|---|---|
| TITLE: Amped Raspberry Pi Hat (1X) | REV: F |
| Company: Sonocotta | Sheet: 1/2 |
| Date: 2024-12-11 | Drawn By: andriy@sonocotta.com |

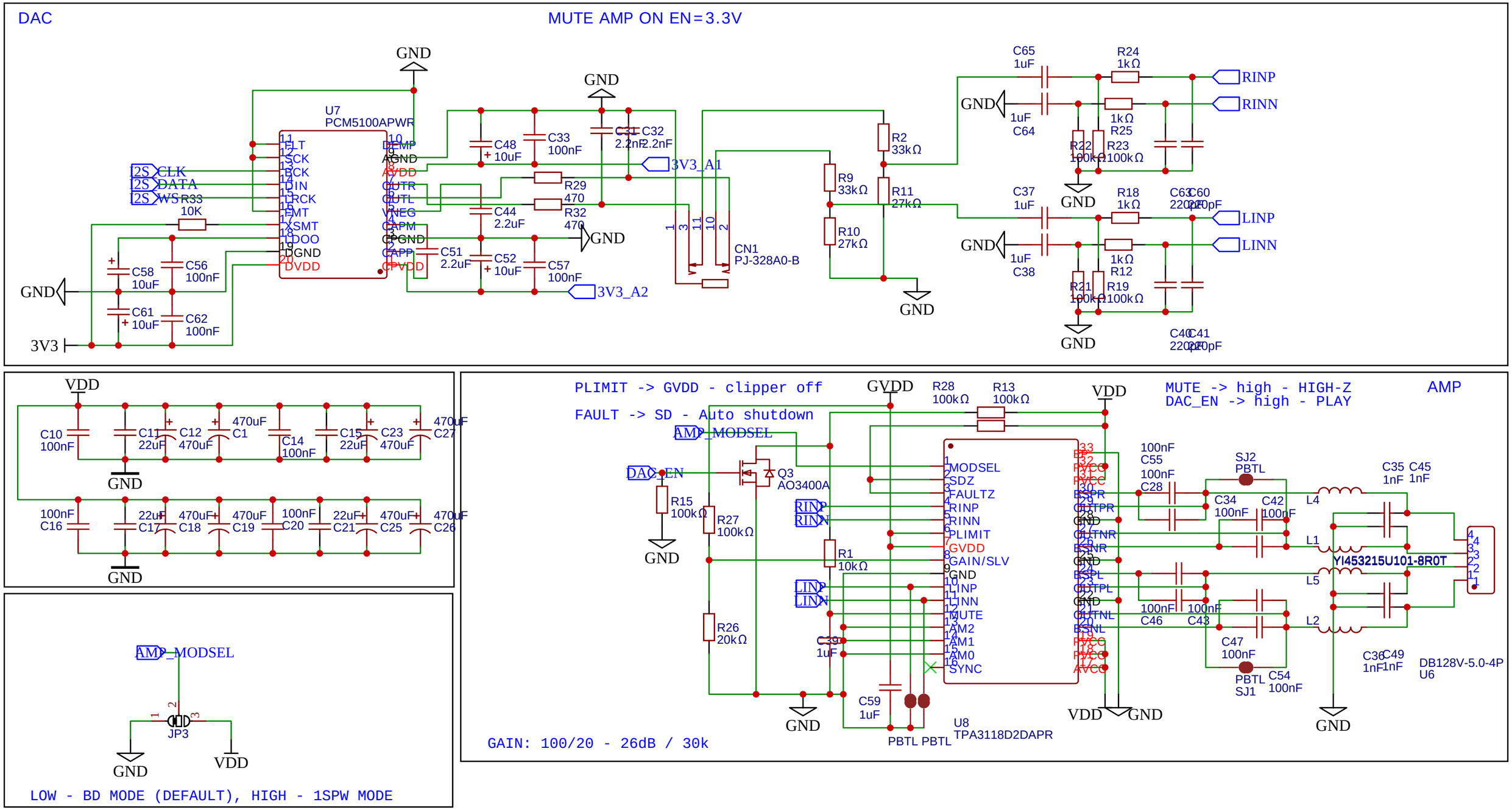











GAIN: 100/20 - 26dB / 30k

| | | |
|---|---|---|
| TITLE: Amped Raspberry Pi Hat (1X) | | REV: F |
| EasyEDA | Company: Sonocotta | Sheet: 2/2 |
| | Date: 2024-12-11 Drawn By: andriy@sonocotta.com | |